SUPERIOR GEARBOX COMPANY

CleanDrive

CleanDrive

Contents

Features and Benefits 3
Nomenclature 4
Quick Select Guide 5
Ratings 8
Dimensions 9
IEC Input Dimensions 11
Accessories 12

SUPERIOR GEARBOX COMPANY

Superior Products

Since 1975, we have used our talents and expertise to manufacture high quality gear drives including right angle, bevel, worm gear and spindles for power transmission systems serving all types of off-road and other industries. We can also custom design gear drives to meet even the most unique gearbox applications, including guiding you from prototype through testing processes.

Superior Advantage

Our method of manufacture, combined with the most up-to-date engineering software in the gear drive industry, allows us to produce consistent and economical gear drives and products designed to deliver the best solutions for your applications. And, the most demanding, challenging applications always need Superior products. These capabilities make us a valuable resource for your gearbox and special design products as well as contract and custom manufacturing needs. We routinely produce consistent and economical products designed to deliver Superior advantages for your products.

Superior Service

We understand that when you do business with Superior Gearbox Company, you're entrusting us with the reputation of your company and your equipment. That's why attention to detail, customer intensive service and quality control are strengths we take very seriously. Each gear drive or other product leaving our facility must undergo a comprehensive inspection process to guarantee its success, and ensure you receive a truly Superior Gearbox.

CleanDrive Features and Benefits

CleanDrive units adhere to generally accepted principles of sanitary design. They enhance the functionality of equipment and facilities while reducing the potential threat of product cross contamination.

CleanDrive units feature housings, shafts and hardware in Stainless Steel.

CleanDrive units use premium bearings and seals.

CleanDrive units feature premium, food grade synthetic lubricant.

CleanDrive units feature smooth surfaces to comply with stringent requirements for the food processing industry.

CleanDrive units feature laser engraved nameplates.

All products within the Superior Gearbox CleanDrive product lines incorporate sound elements of design that allow for easier access to facilitate cleaning.

CleanDrive units are designed to help provide a safe production environment for our customers.

CleanDrive Nomenclature

SSMQ	050	80	63B14	SM	TA
Model	Size	Ratio	Input Size	Output Design	Accessories
SSMQ Motor Input Flange	040 050 063	7.5 10 15 20 25 30 40 50 60 80 100	56B5 63B14 63B5 71B14 71B5 80B14 80B5 90B14 90B5	Shaft Mount Standard – Hollow Output Bore SM	Torque Arm TA Special SP

Determining Your CleanDrive Model Number

Model: All models are direct coupled to a motor (SSMQ).

Size: Select the size of your CleanDrive reducer by using our selection charts on pages 5 - 7. Be sure to select the reducer size that fits the service factor and power requirements of your application.

Ratio: Select the appropriate ratio that will give you your desired output rpm.

Input Size: Input size is based on the motor that will be coupled to the reducer.

Output Design: The CleanDrive unit comes standard as a hollow output bore (SM).

Accessories: CleanDrive accessories can be found on page 12. Units which are outside of the standard CleanDrive design should be designated as “special” and should be submitted for quote. Quote requests should be accompanied by a detailed explanation of the special characteristics of your requested unit.

CleanDrive Quick Select Guide

Using the CleanDrive Quick Select Guide

Service Factor

Service Factor 1.00

Ratio

Input Power

Ratio

Model Size

Input KW	7.5	10	15	20	25	30	40	50	60	80	100
0.08	040	040	040	040	040	040	040	040	040	040	050
0.12	040	040	040	040	040	040	040	040	050	050	063
0.18	040	040	040	040	040	040	040	050	050	050	063
0.25	040	040	040	050	050	050	050	063	063	063	
0.37	040	040	050	050	063	050	063	063			
0.55	040	050	050	063	063	063					
0.75	050	050	063	063							
1.1	063	063	063								
1.5	063	063									

To use the CleanDrive Quick Select Guide*:

1. Select the appropriate service factor for your application (see the Superior Gearbox Service Factor Guide on pages 6 & 7).
2. Select your input power on the appropriate chart.
3. Read across the selected power line until you get to the ratio of the gearbox that you will be using.
4. Upon reaching the appropriate ratio column you will find the Superior Gearbox CleanDrive model number that best suits your selected application.
5. The example above shows how you would select the proper gearbox for an application that requires a 0.18 kW motor and a 50:1 ratio with a 1.0 service factor. The model that would be selected is a size 050 reducer.

*The CleanDrive Quick Selection Guide is to be used as a selection aid only. The customer is responsible for certifying that the gearbox selected is appropriate for their application.

CleanDrive Quick Select Guide

CleanDrive
Quick
Select
Guide

CleanDrive Quick Select Guide

Service Factor 1.00

Ratio

Input KW	7.5	10	15	20	25	30	40	50	60	80	100
0.08	040	040	040	040	040	040	040	040	040	040	040
0.12	040	040	040	040	040	040	040	040	040	040	050
0.18	040	040	040	040	040	040	040	040	050	050	063
0.25	040	040	040	040	040	040	050	050	050	063	063
0.37	040	040	040	040	050	050	050	063	063	063	
0.55	040	040	050	050	050	050	063	063			
0.75	040	050	050	063	063	063	063				
1.1	050	050	063	063							
1.5	050	063	063								

Service Factor 1.25

Ratio

Input KW	7.5	10	15	20	25	30	40	50	60	80	100
0.08	040	040	040	040	040	040	040	040	040	040	050
0.12	040	040	040	040	040	040	040	040	040	050	050
0.18	040	040	040	040	040	040	040	050	050	063	063
0.25	040	040	040	040	050	040	050	050	063	063	063
0.37	040	040	040	050	050	050	063	063	063		
0.55	040	040	050	063	063	063	063				
0.75	050	050	063	063	063	063					
1.1	050	063	063								
1.5	063	063									

Service Factor 1.4

Ratio

Input KW	7.5	10	15	20	25	30	40	50	60	80	100
0.08	040	040	040	040	040	040	040	040	040	040	050
0.12	040	040	040	040	040	040	040	040	050	050	050
0.18	040	040	040	040	040	040	050	050	050	063	063
0.25	040	040	040	040	050	050	050	063	063	063	
0.37	040	040	050	050	050	050	063	063			
0.55	040	050	050	063	063	063	063				
0.75	050	050	063	063		063					
1.1	050	063	063								
1.5	063	063									

CleanDrive Quick Select Guide

Service Factor 1.5

Ratio

Input KW	7.5	10	15	20	25	30	40	50	60	80	100
0.08	040	040	040	040	040	040	040	040	040	040	050
0.12	040	040	040	040	040	040	040	040	050	050	063
0.18	040	040	040	040	040	040	040	050	050	050	063
0.25	040	040	040	050	050	050	050	063	063	063	
0.37	040	040	050	050	063	050	063	063			
0.55	040	050	050	063	063	063					
0.75	050	050	063	063							
1.1	063	063	063								
1.5	063	063									

Service Factor 1.75

Ratio

Input KW	7.5	10	15	20	25	30	40	50	60	80	100
0.08	040	040	040	040	040	040	040	040	040	050	050
0.12	040	040	040	040	040	040	040	050	050	050	063
0.18	040	040	040	040	050	050	050	050	063	063	063
0.25	040	040	040	050	050	050	063	063	063		
0.37	040	040	050	050	063	063	063				
0.55	050	050	063	063	063	063					
0.75	050	063	063								
1.1	063	063									
1.5	063										

Service Factor 2

Ratio

Input KW	7.5	10	15	20	25	30	40	50	60	80	100
0.08	040	040	040	040	040	040	040	040	050	050	050
0.12	040	040	040	040	040	040	050	050	050	063	063
0.18	040	040	040	040	050	050	050	063	063	063	
0.25	040	040	050	050	050	050	063	063	063		
0.37	040	050	050	063	063	063	063				
0.55	050	050	063	063							
0.75	063	063	063								
1.1	063	063									
1.5											

CleanDrive Quick Select Guide

CleanDrive Ratings

1400 RPM	Ratio	7.5	10	15	20	25	30	40	50	60	80	100
SSMQ040	Input Power kW	0.89	0.70	0.48	0.37	0.30	0.31	0.23	0.18	0.15	0.12	0.09
	Output Torque (N-m)	39	40	40	39	38	45	40	36	36	34	30
	Output RPM	187	140	93	70	56	47	35	28	23	18	14
	Output OHL (kN)	1.31	1.44	1.65	1.82	1.96	2.08	2.29	2.47	2.63	2.89	3.11
SSMQ050	Input Power kW	1.59	1.21	0.89	0.67	0.55	0.56	0.42	0.34	0.28	0.22	0.17
	Output Torque (N-m)	72	70	75	72	71	83	76	74	68	65	55
	Output RPM	187	140	93	70	56	47	35	28	23	18	14
	Output OHL (kN)	1.8	1.98	2.27	2.5	2.69	2.86	3.15	3.39	3.61	3.97	4.28
SSMQ063	Input Power kW	2.86	2.28	1.65	1.21	0.99	1.07	0.77	0.60	0.50	0.40	0.34
	Output Torque (N-m)	127	134	139	133	131	161	147	135	128	126	119
	Output RPM	187	140	93	70	56	47	35	28	23	18	14
	Output OHL (kN)	2.35	2.59	2.97	3.27	3.52	3.74	3.59	4.44	4.71	5.19	5.59

NOTE: All ratings are based on 1.0 Service Factor.

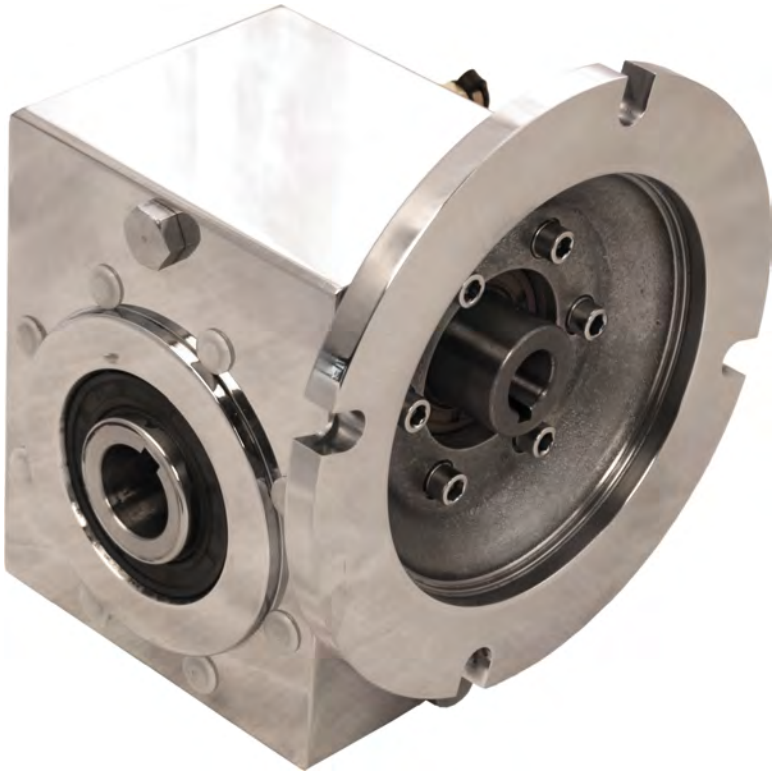

CleanDrive Dimensions

CleanDrive Dimensions

FLANGE INPUT (BMQ)

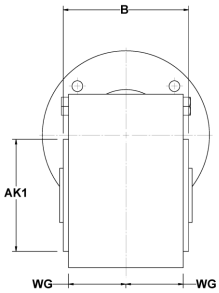

FLANGE INPUT (BMQ)

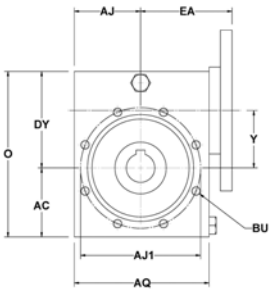

FLANGE INPUT (BMQ)

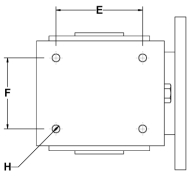

HOLLOW BORE OUTPUT

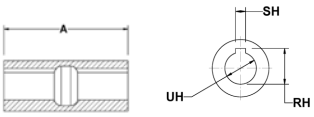

SINGLE OUTPUT SHAFT

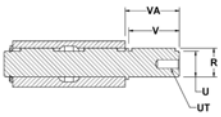

DOUBLE OUTPUT SHAFT

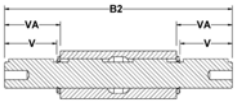

Output Key	40	50	63
Square	M6	M8	M8

CleanDrive Dimensions

	40	50	63
A	96	111	127.5
AC	50	58	74
AJ1	85	105	132
AK1	76	93	118
AQ	102	118	148
B	85	96	109
B2	182	218	231
BU	4XM6-1.0X10	8XM811.25X14	8XM8-1.25X14
DY	71.5	84	102
E	75	80	120
EA	72	80	98
F	45	65	80
O	121.5	144	174
R	20.5	28	28
RH	20.8	28.3	28.3
SH	6	8	8
U	18	25	25
UH	18	25	25
UT	M6-1.0X13	M8-1.25X18	M10-1.5X18
V	40	50	50
VA	43	53.5	53.5
WG	45	52.5	59
Y	40	50	63

CleanDrive
IEC Input Dimensions

CleanDrive
IEC Input
Dimensions

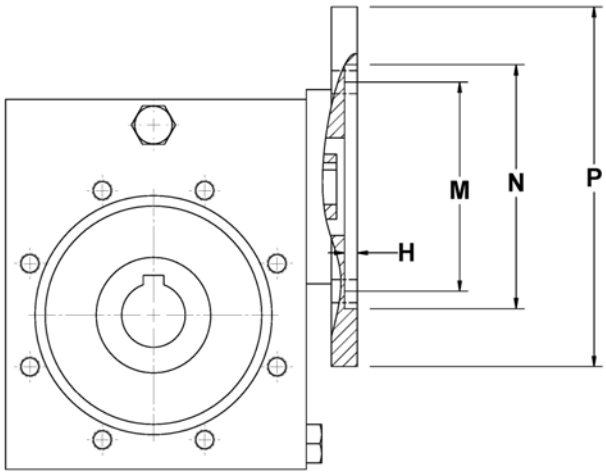

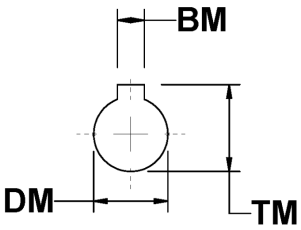

	IEC Flange	Dimensions							Available Ratios										
		N	M	P	H	TM	BM	DM	7.5	10	15	20	25	30	40	50	60	80	100
SSMQ040	71B5	110	130	160	5	16.3	5	14	●	●	●	●	●	●	●				
	71B14	70	85	105	5	16.3	5	14	●	●	●	●	●	●	●				
	63B5	95	115	140	5	12.8	4	11				●	●	●	●	●	●	●	
	63B14	60	75	90	5	12.8	4	11				●	●	●	●	●	●	●	
	56B5	80	100	120	4	10.4	3	9								●	●	●	●
SSMQ050	80B5	130	165	200	6	21.8	6	19	●	●	●	●	●	●					
	80B14	80	100	120	6	21.8	6	19	●	●	●	●	●	●					
	71B5	110	130	160	5	16.3	5	14		●	●	●	●	●	●	●	●	●	
	71B14	70	85	105	5	16.3	5	14		●	●	●	●	●	●	●	●	●	
	63B5	95	115	140	5	12.8	4	11							●	●	●	●	
	63B14	60	75	90	5	12.8	4	11							●	●	●	●	●
SSMQ063	90B5	130	165	200	6	21.8	6	24	●	●	●	●	●	●					
	90B14	95	115	140	6	27.3	8	24	●	●	●	●	●	●					
	80B5	130	165	200	6	21.8	6	19			●	●	●	●	●	●	●		
	80B14	80	100	120	6	21.8	6	19			●	●	●	●	●	●	●		
	71B5	110	130	160	5	16.3	5	14							●	●	●	●	●
	71B14	70	85	105	5	16.3	5	14							●	●	●	●	●

CleanDrive Accessories

Torque Arm

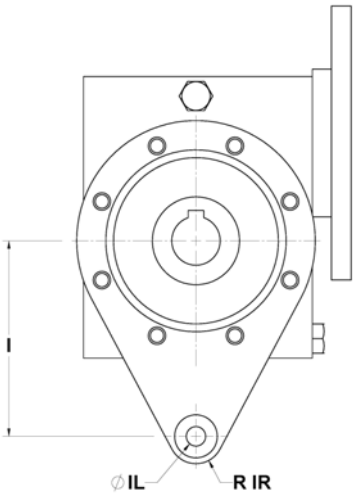

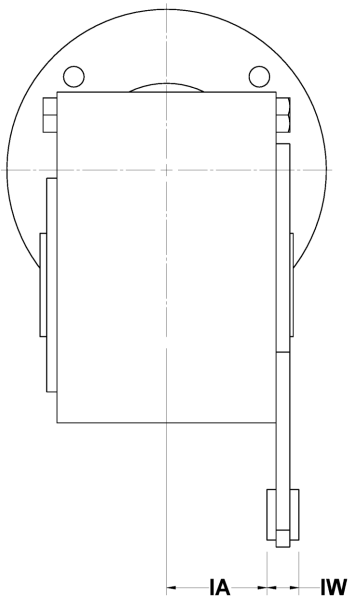

	40	50	63
I	100	100	150
IA	39	44	51.5
IL	10	10	10
IR	15	14	15
IW	14	14	14

Limited Warranty

Superior Gearbox Company warrants its products to be free from defects in materials and workmanship for one year from date of shipment, or in-service date. The start of the in-service date cannot exceed ship date by more than one year. It is the responsibility of the customer to provide proof of in-service date. Superior Gearbox Company will repair or replace, at its option, any item found to be defective upon inspection at our factory. Warranty claims must be made in writing to Superior Gearbox Company, and authorization for return of defective items must be obtained prior to shipment. All shipments must be prepaid. Superior's responsibility under this warranty shall be limited to the repair or replacement of our product. The manufacturer disclaims any liability of consequential or special damages or economic loss resulting from the failure of the product.

Warranted Product Limited Warranty

In the event that a product is repaired or replaced under the warranty policy, that unit's warranty will extend to the original warranty date or sixty days from the date of shipment from Superior Gearbox Company, whichever is longer.

Contact the sales department to get a return authorization number. This number needs to be on the outside of the returned package. Send the package to: Superior Gearbox Company, 803 West Street, Stockton, MO 65785. The gearbox warranty will be void if the gearbox has been opened. Items returned for restock will have a 15% restock fee issued once they are determined to be in new condition.

SUPERIOR GEARBOX COMPANY

P.O. Box 645
803 West Street
Stockton, MO 65785
1-800-346-5745
Fax: 417-276-3492
www.superiorgearbox.com

SUPERIOR GEARBOX COMPANY

P.O. Box 645
803 West Street
Stockton, MO 65785
1-800-346-5745
Fax: 417-276-3492

www.superiorgearbox.com